This project has received funding from the European Union's Horizon2020 research and innovation programme under grant agreement N° 863819

FlexPlan

Advanced planning tool specifications

FlexPlan Advisory Board Meeting, October 29th, 2020

Hakan Ergun, KU Leuven

Agenda

- Objectives of the work package
- Structure of the *FlexPlan* planning tool
- Scope of modelling and planning tool features
- Validation & testing
- Next steps

Work package objectives

- To ***define functional modelling specifications*** for the new advanced planning tool, which are then implemented in WP3.
- To ensure ***efficient implementation of all innovative mathematical and modelling features***, taking into account the remarkable dimension of the scenarios to be analyzed:
  - Analysis of best planning strategy carrying out a selection within a limited (but very high) number of expansion options
  - Planning scenario over several decades: 2030-2040-2050
  - Target function open to different criteria introducing CBA elements in the optimization loop
  - T&D integrated planning
  - Embedded environmental analysis (air quality, carbon footprint, landscape constraints)
- To ***test the new modelling concepts on small examples*** to identify the possible bottlenecks in the extrapolation of the developed techniques to realistic large scale (regional and pan-European) problems.

Planning tool structure and interactions with other WPs

FlexPlan

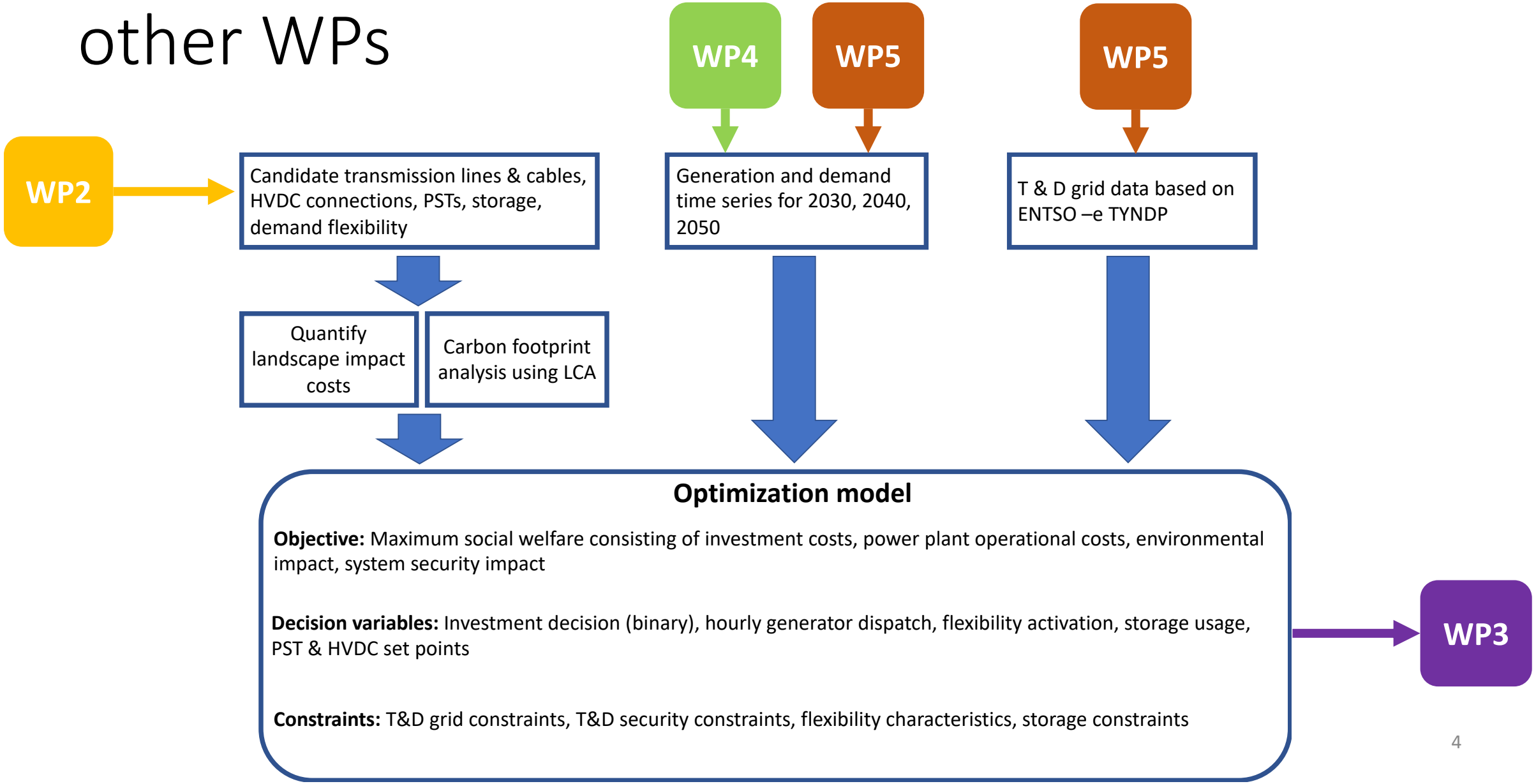

Optimization objective

- The maximum social welfare objective formulated as a cost minimization
  - Quantification of potential benefits not straight-forward without market assumptions
  - Danger of double counting benefits / costs due to complex flow of money
  - Eventually, all cost needs to be bared by consumers in some in way
- Objective function structure:
  - $\min \sum_y [\sum_t [\sum_i (C_{y,t,i}) + \sum_{y,j} \alpha_{y,j} (C_{y,t,j}) + \widetilde{U}_{y,t,c} \Delta t \sum_c C^{voll}_{u,t,y} \Delta P_{u,c,t,y}] + \sum_j \alpha_{y,j} I_{y,j}]$

Operational cost of existing equipment

Operational cost of candidate equipment

Expected cost due to outages

CAPEX of candidate equipment

i… set of existing equipment
j… set of candidate equipment
α… binary decision variable
t….set operational time points (8760h)
y... set of planning horizons (2030, 2040, 2050)

  - Environmental impact cost considered as part of operational and CAPEX cost

Objective function ingredients

- Generators
  - Operational costs
  - Generator emission impact costs
- Storage
  - Operational costs, e.g. storage losses (existing and new)
  - Storage CAPEX (new), storage carbon footprint impact cost (new)
- Demand flexibility (only new flexibility considered)
  - Cost of voluntary demand reduction
  - Cost of involuntary demand reduction
  - Cost of voluntary demand shifting
  - CAPEX and carbon footprint cost
- Grid elements
  - AC line CAPEX and carbon footprint cost (new)
  - PST CAPEX and carbon footprint cost (new)
  - HVDC line and converter CAPEX and carbon footprint cost (new)
  - Expected redispatch / load shedding cost due to outages

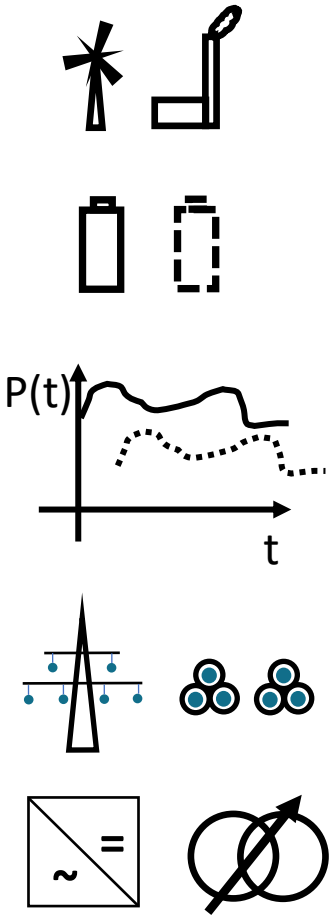

FlexPlan

Environmental impact modelling

Air quality impact modelling

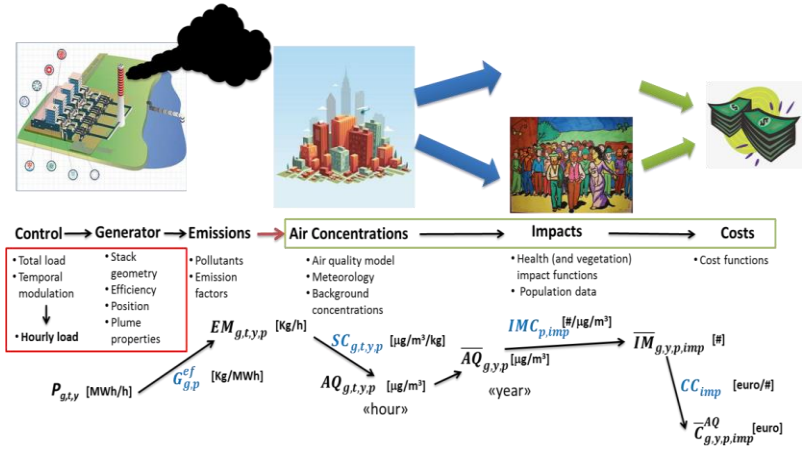

Linearized model quantifying air quality impact related costs in dependence of generation

Carbon foot print modelling

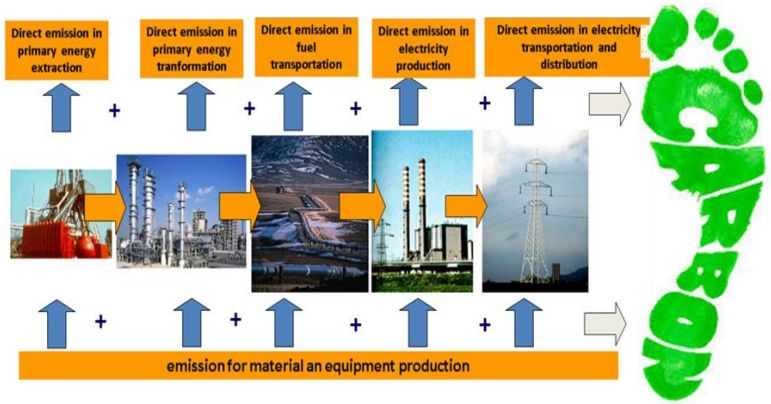

CO2 emission cost of power generation as direct input, CO2 impact of new grid investments using LCA

Landscape impact modelling

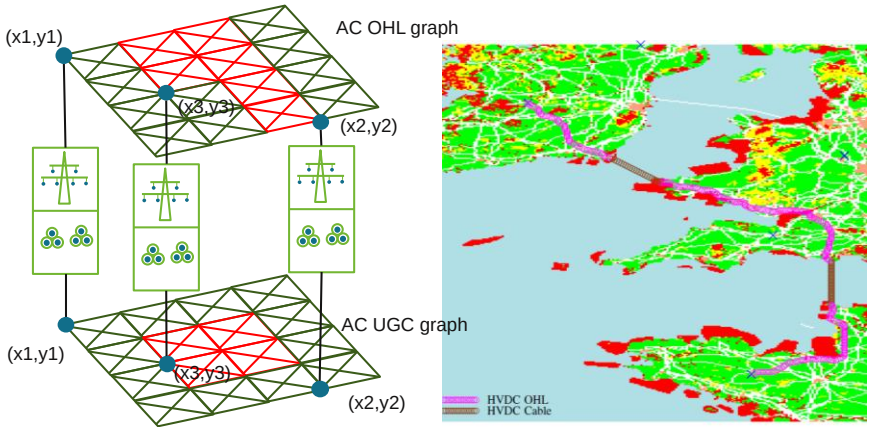

Using optimal routing routing algorithm quantifying landscape impact cost for OHL and cable investments

Structure of combined T&D modelling

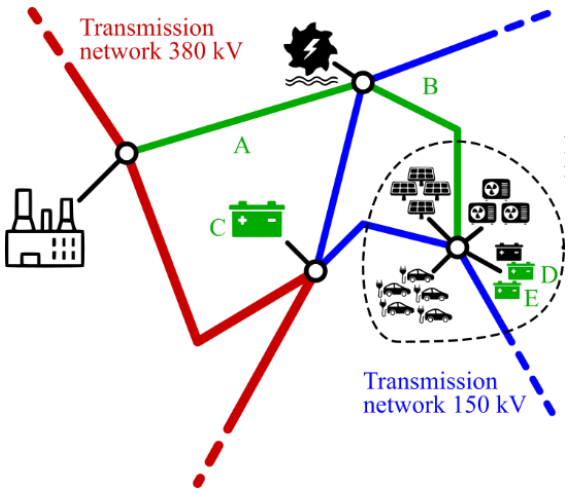

Option 1: Transmission only

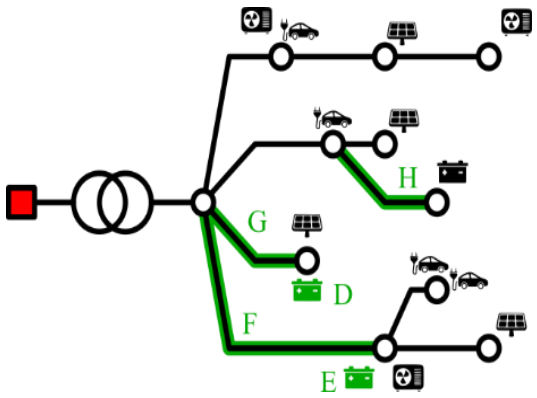

Option 2: Distribution only

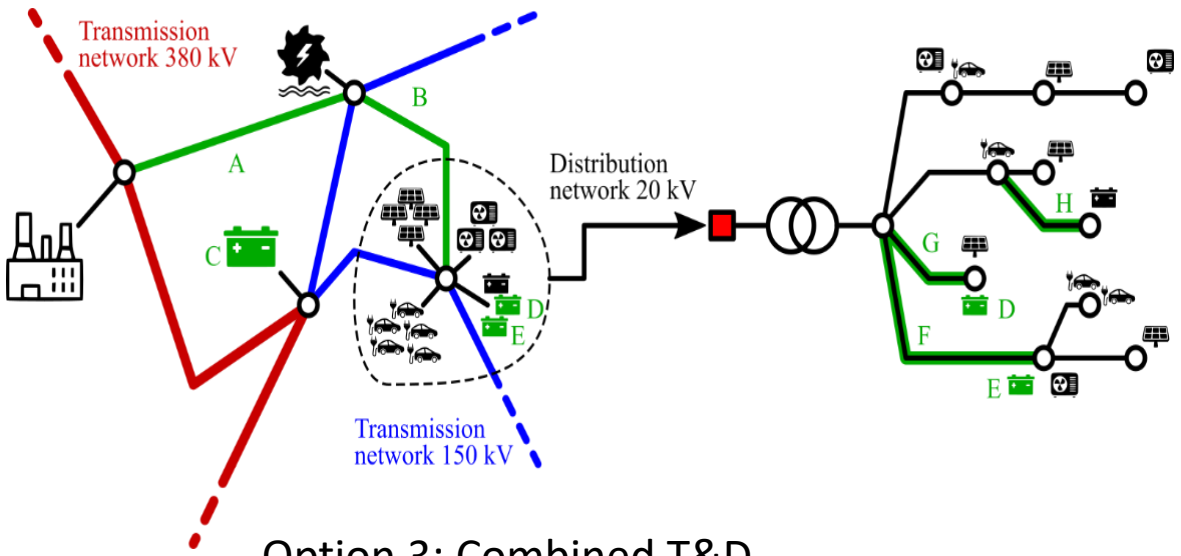

Option 3: Combined T&D

- Generic model formulation to support all options
- Allows model decomposition for combined T&D modelling
  - *Distribution system expansion as transmission planning candidate*

FlexPlan

Decomposed T&D modelling

1) Solve the distribution system planning problem
2) Solve the distribution system planning problem with maximum flexibility objective
3) Solve the distribution system planning problem with intermediate flexibility objective
4) Provide range of flexibility and cost of distribution system expansion as input to the transmission planning model

(1)

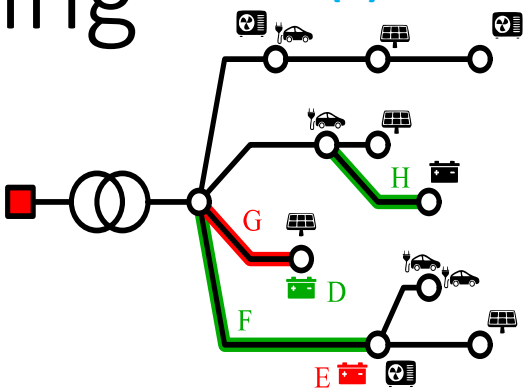

(2)

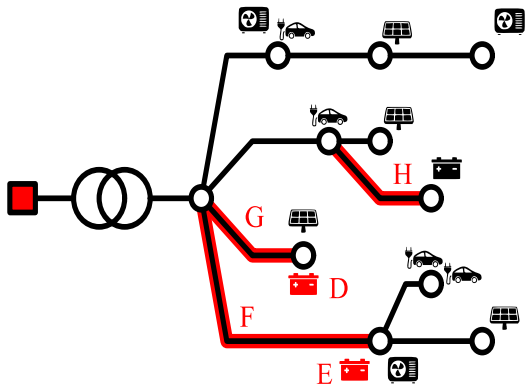

(3)

Distribution planning alternative	Availability of storage capacity from distribution network			Additional investments costs
	Existing	Candidate D	Candidate E	
I	70%	50%	0%	C_{step1}
II	100%	70%	90%	C_{step2}
III	70%	70%	50%	C_{step3}

(4)

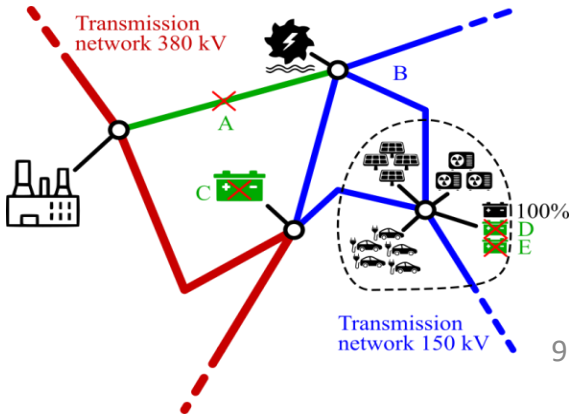

Flexible demand modelling

- Generic flexible demand model to cover all aspects and constraints:

$$P_{u,t,y}^{flex} = P_{u,t,y}^{ref} - P_{u,t,y}^{nce} - P_{u,t,y}^{lc} + \Delta P_{u,t,y}^{ds,up} - \Delta P_{u,t,y}^{ds,dn}$$

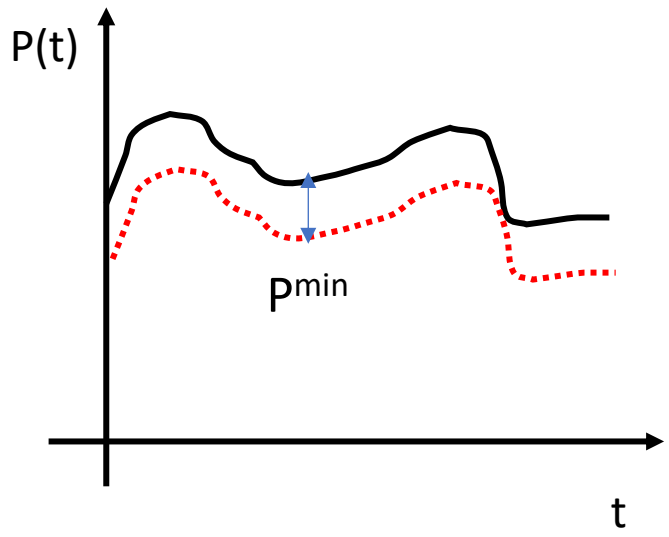

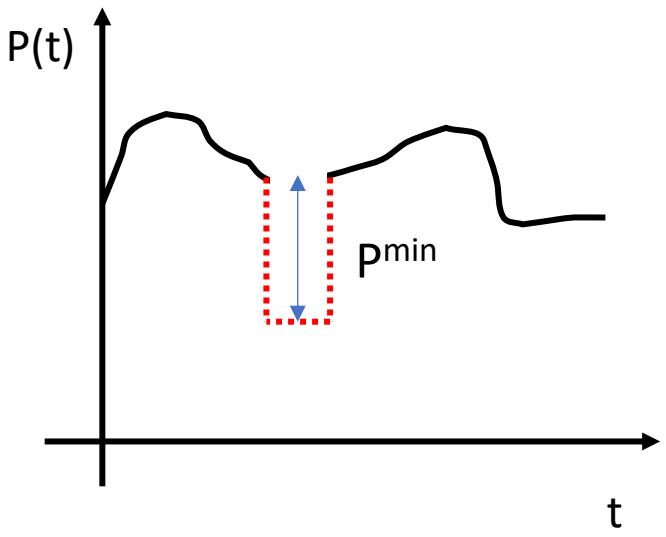

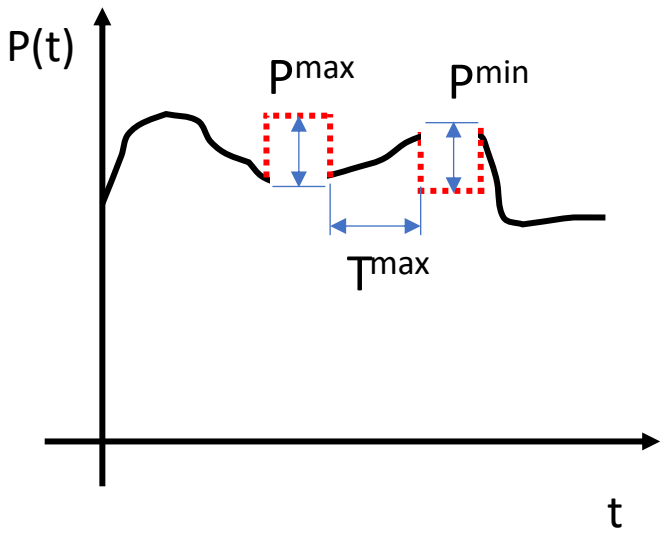

Voluntary reduction of demand with power & energy constraints

Involuntary reduction of demand with power constraints

Upwards and downwards demand shifting with power & time constraints

Monte Carlo scenario generation and reduction

- Generation of a high number of MC planning years from a limited set of scenarios obtained from WP4 with nodal resolution

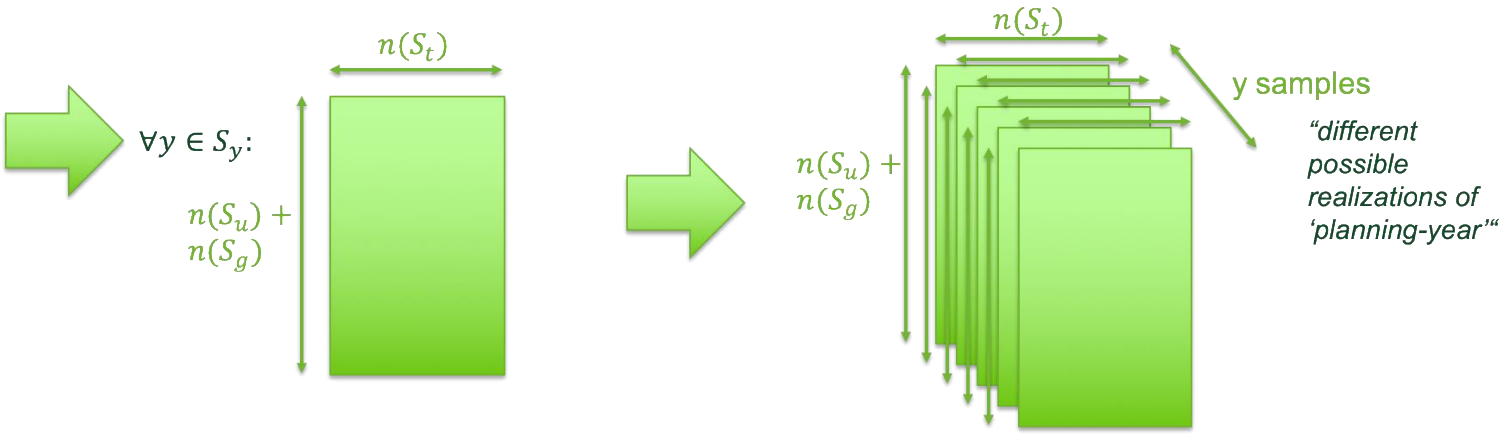

- Reduction of the number of time series based on clustering techniques
- Reduction of the length of the time series (if required for computational reasons)

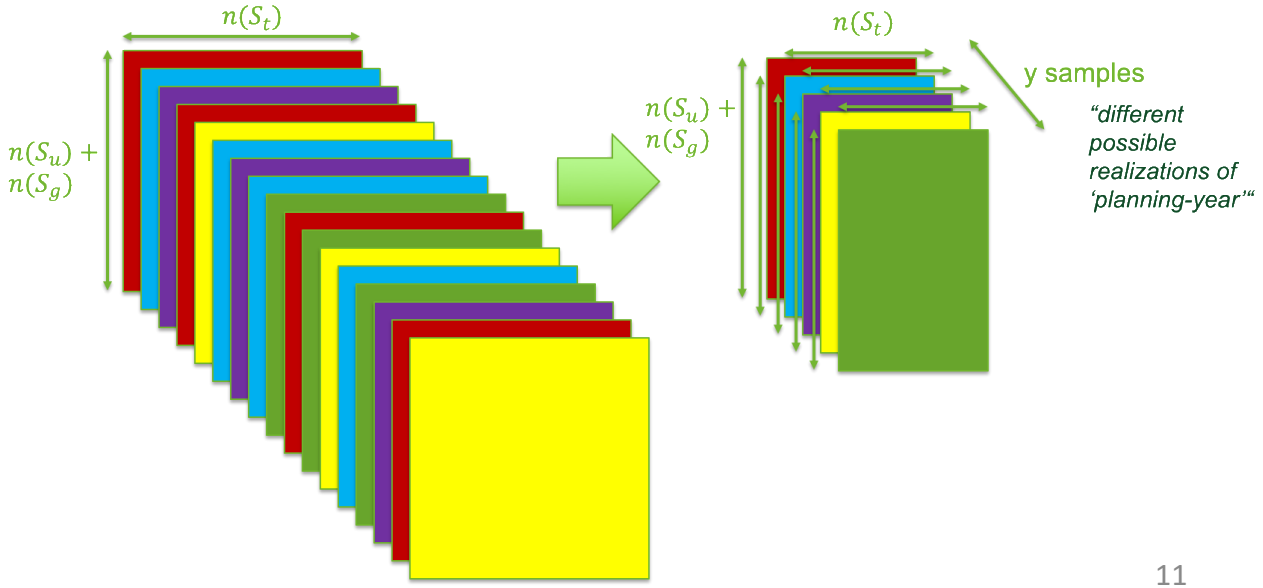

Validation & Testing

- *FlexPlan.jl,* an optimization package in Julia language:
  - Based on *PowerModels.jl* (LANL-ANSI) & *PowerModelsACDC.jl* (KUL)
  - Flexible design to exchange solvers and test efficiency of the developed models
  - Extending model formulation in a flexible way
  - Experiment with decomposition techniques
  - In depth analysis of model trade-offs
- *FlexPlan.jl* will serve as design and testing reference for the WP3 planning tool

FlexPlan

Validation & Testing

- First validation tests have started on “Italian-like” system
  - IEEE test system for transmission, CIGRE test system for distribution modelling
  - Combined with geographic information of Italy for representation of environmental constraints
  - Generation and demand time series linked to physical location of the grid nodes

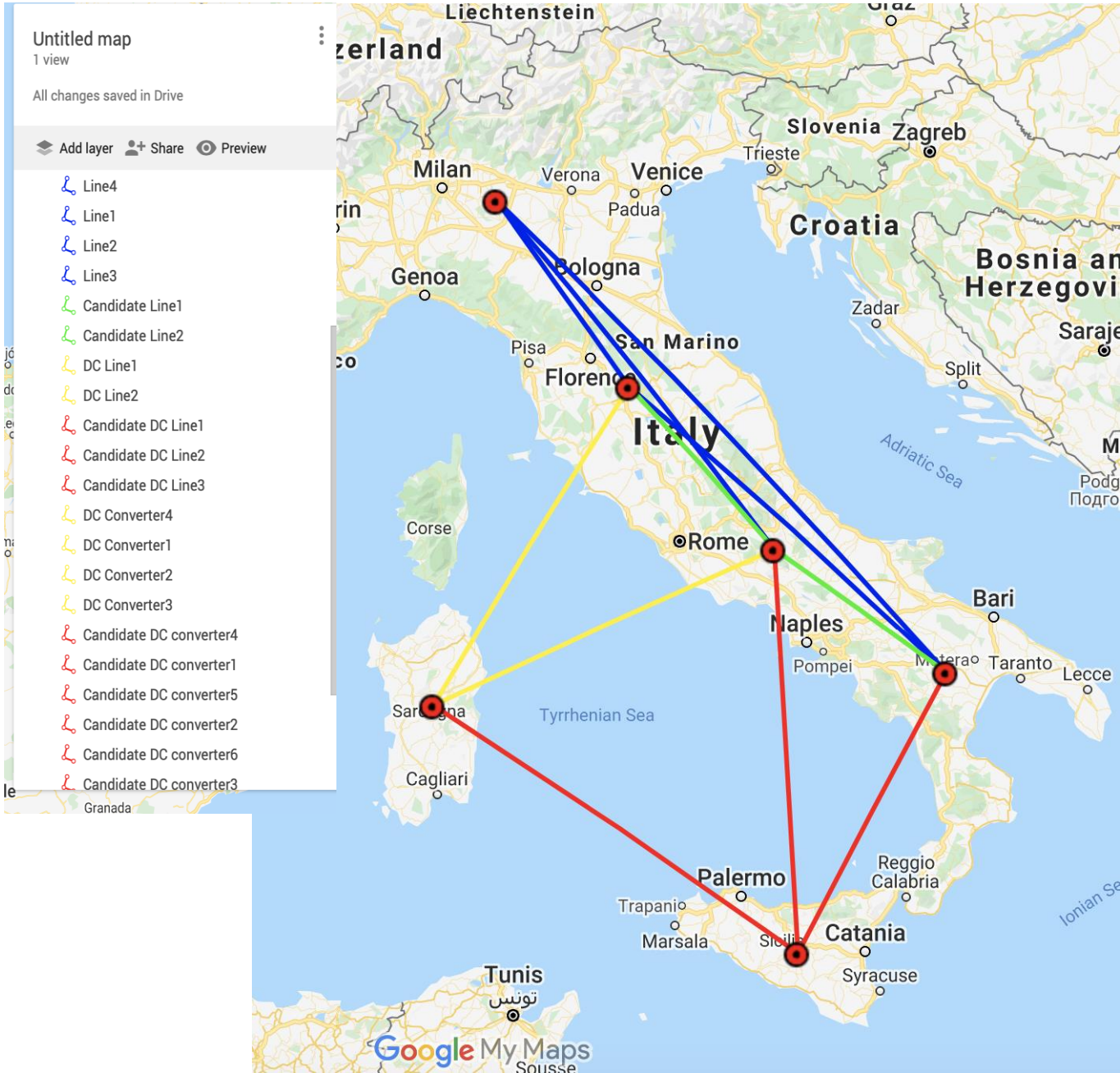

Next steps

- Full implementation of the planning model within *FlexPlan.jl*
- Extensive testing of:
  - Modelling features
  - Parameter sensitivities
  - Computational performance
- Publishing mathematical model and results

Thank you for your attention!

Time for questions and discussion.